victoria + albert®

volcanic limestone baths

Staffordshire 41

Staffordshire wall mounted fixed shower head and arm

The Staffordshire Collection includes traditional mixers and showers, featuring authentic ceramic handles and vintage-designed spouts. Made in England using traditional techniques.

- 7.25psi minimum

Polished chrome (shown)

Pomme de douche à fixation murale

La collection Staffordshire inclut des mitigeurs et des colonnes de douche traditionnels avec d'authentiques poignées en céramique ainsi que des embouts de style vintage. La collection est fabriquée en Angleterre selon des techniques traditionnelles.

- Minimum 7,25psi

Chrome poli (voir photo)

Ducha fija con brazo para montaje sobre pared

La Colección Staffordshire incluye griferías y columnas de ducha clásicas, que incluyen mangos en cerámica auténtica y caños de diseño vintage. Fabricada en Inglaterra a partir de técnicas tradicionales.

- Mínimo 7,25psi

Cromado brillante (ver foto)

STA-41-PC Polished chrome, Chrome poli, Cromado brillante

STA-41-BN Brushed nickel, Nickel brossé, Níquel satinado

STA-41-PN Polished nickel, Nickel poli, Níquel brillante

STA-41-UB Unlacquered brass, Laiton poli, Latón no lacado

Unlacquered brass is a "living finish" that will patina naturally over time without regular polishing
Le laiton mat est une "finition vivante" qui se patine naturellement avec le temps
El bronce no lacado es un "acabado vivo" que irá cambiando gracias al desarrollo de una pátina natural que se irá creando a medida que pase el tiempo y sin necesidad de pulirlo

5 years

WaterSense Meets EPA Criteria Certified by IAPMO R&T

GREEN UPC C Water Efficiency

Massachusetts Code: File No. Pending
cUPC listing (ASME & CSA) by IAPMO: File No. Pending
Lead Free listing (Safe Drinking Water Act & California Health & Safety Code) by IAPMO: File No. Pending
Drinking Water Listing (NSF 61) by IAPMO: File No. Pending
CEC Appliance Effiency Program: Pending
Department of Energy Certificate: Pending
ADA Compliant: Pending

VA/1181/02/Oct19

Staffordshire 41 STA-41-**

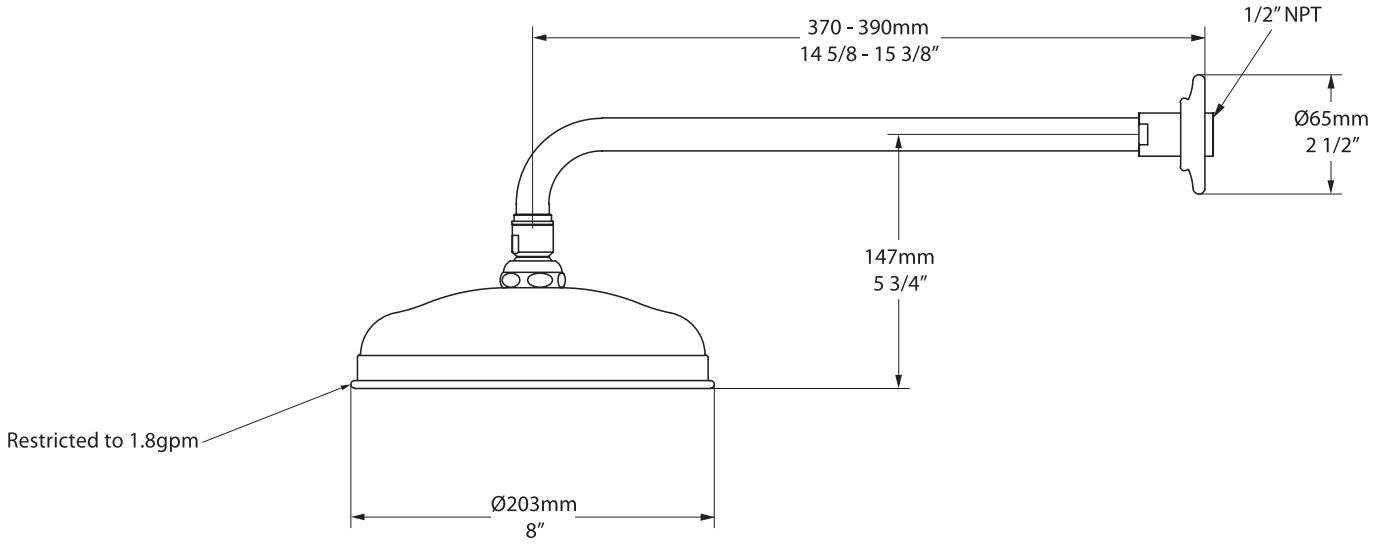

Staffordshire 41
US 7.25psi minimum, 14.50psi recommended
FR Minimum 7,25psi, 14,50psi recommandée
ES Mínimo 7,25psi, 14.50psi recomendado

***All measurements subject to +/-5% tolerance**

.dwg | .dxf | .skp www.vandabaths.com

Massachusetts Code: Approved
cUPC listing (ASME & CSA) by IAPMO: Listed
Lead Free listing (Safe Drinking Water Act & California Health & Safety Code) by IAPMO: File No. Pending
Drinking Water Listing (NSF 61) by IAPMO: File No. Pending
CEC Appliance Effiency Program: Listed
Department of Energy Certificate: Pending
ADA Compliant: Pending