Kaldera 6 KAL6-N-SW-OF

Top view

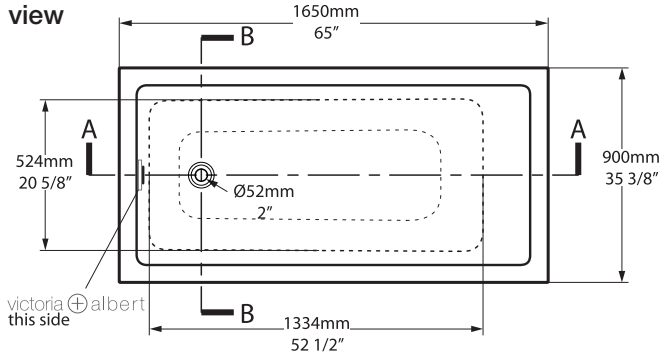

Drop In Cut Out

1619mm x 857mm
63 3/4″ x 33 3/4″

UnderMount Cut Out

1584mm x 835mm
62 3/8″ x 32 7/8″

Side view

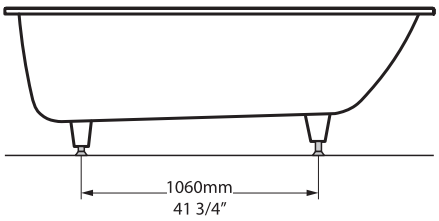

Section AA

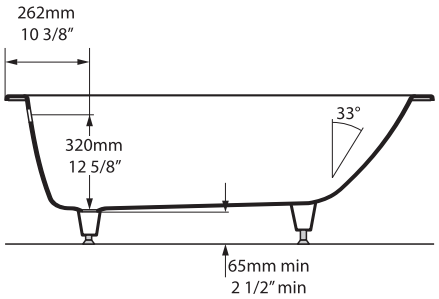

Front view

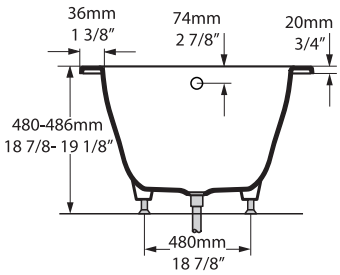

Section BB

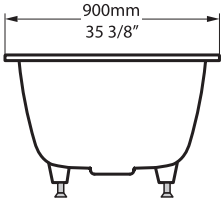

rich in Volcanic Limestone™

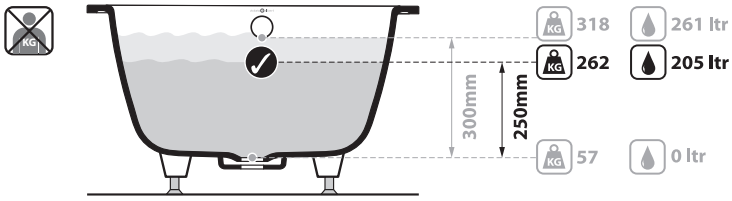

BV-2.1_0047(B)

Recommended wastes: K16

*All measurements subject to +/-5% tolerance

25 years

Guaranteed for residential use for 25 years
25 Jahre Garantie bei privater Nutzung
25 ans de garantie pour un usage domestique
Garantía de 25 años para uso domestico
La sicurezza garantita per uso residenziale per 25 anni

8 years

Guaranteed for commercial use for 8 years
8 Jahre Garantie bei gewerblicher Nutzung
8 ans de garantie pour un usage commercial
Garantía de 8 años para uso comercial
La sicurezza garantita per uso commerciale per 8 anni